A Practical and Effective Way of Applying IEEE Std 519-2014 Harmonic Limits

White Paper

Most electrical engineers today appreciate the need to control harmonics on their power distribution networks. If left uncontrolled, harmonics have been known to cause overheating of electrical equipment and create equipment operational problems due to high voltage distortion conditions. But as we get inundated with technical information and opinions on the topic, it becomes increasingly more difficult to determine how best to manage these harmonics.

Electrical Standards associations such as IEEE and IEC have introduced standards and recommendations that address harmonics but these are not always easy to interpret or apply. This paper has been prepared to assist with the application of the standard that has been widely adopted - particularly in N. America but also quite commonly referenced in many other areas of the world. This is IEEE Std 519-2014, 'Recommended Practice and Requirements for Harmonic Control in Electrical Power Systems'.

IEEE Std 519-2014 Harmonic Limits

The latest revision of IEEE Std 519 was released in March of 2014. This replaced the previous version that had been around since 1992. IEEE Std 519 was established to prevent harmonics generated by non-linear loads from negatively affecting the power system and connected loads.

IEEE Std 519 provides recommendations and guidelines for limiting harmonic voltage and current distortion at a point of common coupling (PCC) between the electrical system owner or operator and a user. The standard recognizes the responsibility of an electricity user to not degrade the voltage quality of the utility by drawing heavy non-linear or distorted currents. It also recognizes the responsibility of the utility to provide users with a near sine wave voltage.

Recommended harmonic limits are found in Section 5 of the standard and are shown in Tables 1 and 2.

TABLE 1

VOLTAGE DISTORTION LIMITS IN IEEE STD 519-2014		
Bus Voltage *V* at PCC	Individual Harmonic (%)	Total Harmonic Distortion THD (%)
$V \leq 1.0$ kV	5.0	8.0
1 kV $< V \leq$ 69 kV	3.0	5.0
69 kV $< V \leq$ 161 kV	1.5	2.5
161 kV $< V$	1.0	1.5

© STULZ / @ Mirus – All rights reserved

TABLE 2

CURRENT DISTORTION LIMITS IN IEEE STD 519 FOR SYSTEMS RATED 120 V THROUGH 69 KV						
Maximum Harmonic Current Distortion in Percent of I_L						
Individual Harmonic Order (odd harmonics)						
/SC//L	3 ≤ h < 11	11 ≤ h < 17	17 ≤ h < 23	23 ≤ h < 35	35 ≤ h ≤ 50	TDD
< 20[c]	4.0	2.0	1.5	0.6	0.3	5.0
20 < 50	7.0	3.5	2.5	1.0	0.5	8.0
50 < 100	10.0	4.5	4.0	1.5	0.7	12.0
100 < 1000	12.0	5.5	5.0	2.0	1.0	15.0
> 1000	15.0	7.0	6.0	2.5	1.4	20.0

Some important differences between revision 2014 and the previous 1992 version include:

1. THD and TDD definitions now allow the inclusion of harmonics above the 50th when necessary.
2. Voltage distortion limits for < 1kV systems have been relaxed to 8% from 5%.
3. Lower voltage distortion limits for Special Applications and higher limits for dedicated systems have been removed.
4. Current distortion limits for > 161kV systems have been changed. Current limits for other voltage systems remain the same.
5. Very Short Time and Short Time limits have been introduced.
6. An allowance for increased harmonic limits at higher frequencies can be applied when steps are taken to reduce lower frequency harmonics.

It can be argued that at least some of these changes have not been for the better. For example, some sensitive equipment might not be tolerant of VTHD levels as high as 8% so relaxing the limit and removing requirements for Special Applications exposes them to potential issues. Also, relaxing the higher frequency limits when steps are taken to reduce lower frequency harmonics (such as phase shifting strategies), seems to defy logic. High frequency harmonics can cause problems at much lower levels so tighter limits are certainly justified regardless of the levels of low frequency harmonics.
The fact that harmonics above the 50th can now be included in THD and TDD calculations is a positive addition but since the wording leaves much to interpretation, it is rarely applied. As we become more aware of Supraharmonic related issues (defined here as frequencies between 2 kHz and 150 kHz), applying limits above the 50th will see more importance.

© STULZ / @ Mirus – All rights reserved

IEEE Std 519-2014 Definitions

So let's begin with some definitions found in the standard.

> *Point of Common Coupling (PCC): Point on a public power supply system, electrically nearest to a particular load, at which other loads are, or could be, connected. The PCC is a point located upstream of the considered installation.*

PCC is used to define a location where the harmonic limits are to be applied.

> *Total Harmonic Distortion (THD): The ratio of the root mean square of the harmonic current, considering harmonic components up to the 50th order and specifically excluding interharmonics, expressed as a percentage of the fundamental. Harmonic components of order greater than 50 may be included when necessary.*

In this definition, THD is referring to current harmonic distortion. As the THD acronym is also applied to voltage harmonic distortion it is important to distinguish to which it is referring. In this paper, we will refer to current distortion as iTHD and voltage distortion as vTHD.

iTHD and vTHD can be calculated by the equations below. Fortunately, all power quality instruments do these calculations so there is no need to do the math. The important thing to note is that all individual harmonics contribute to the total harmonic distortion.

$$iTHD = \frac{\sqrt{I_2^2 + I_3^2 + I_4^2 + I_5^2 + \ldots}}{I_1} \times 100\%$$

$$vTHD = \frac{\sqrt{V_2^2 + V_3^2 + V_4^2 + V_5^2 + \ldots}}{V_1} \times 100\%$$

> *Total Demand Distortion (TDD): The ratio of the root mean square of the harmonic current, considering harmonic components up to the 50th order and specifically excluding interharmonics, expressed as a percentage of the maximum demand current. Harmonic components of order greater than 50 may be included when necessary.*

© STULZ / @ Mirus – All rights reserved

TDD can be represented mathematically as:

$$TDD = \frac{\sqrt{I_2^2 + I_3^2 + I_4^2 + I_5^2 + \ldots}}{I_L} \times 100\%$$

With I_L defined in the standard as:

> *Maximum Demand Current (IL): The current value at the PCC taken as the sum of the currents corresponding to the maximum demand during each of the 12 previous months divided by 12.*

This definition, which is incredibly difficult to apply, must have been proposed by Utility engineers who define peak demand load in this manner. It might be fine for that purpose but, how is it possible to determine this value at the design stage when engineers are trying to determine how best to deal with the harmonics generated by non-linear loads? And even after installation, records for an entire year would need to be kept in order to determine a value, making application impractical. Therefore, another option for determining peak demand current will be proposed in this paper. Also, since TDD only applies to current harmonics, this paper will refer to it as iTDD going forward.

Another definition worth noting is Short Circuit Ratio (SCR).

> *Short Circuit Ratio (ISC/IL): At a particular location, the ratio of the available short-circuit current, in amperes, to the load current, in amperes.*

SCR provides a reference to source impedance relative to the load. During a short circuit, the fault current that flows is limited by the source impedance through Ohm's Law (Isc = V / Zs). The higher the source impedance, the lower the short circuit current for the same voltage and vice versa.

Ohm's law also determines the contribution of individual harmonic currents to the total harmonic voltage distortion of the power system (Vh = Ih x Zh). The higher the source impedance, the higher the voltage distortion resulting from the flow of current harmonics through the distribution system and vice versa.

As seen in Table 2, the standard uses SCR to set current distortion limits where the higher the SCR, the more relaxed the current distortion limits. This is logical because, for the same amount of current harmonics, voltage distortion produced will vary depending upon the source impedance. Although current distortion can cause overheating issues, it is more important to control their contribution to voltage distortion, which can cause even more severe and diverse issues.

© STULZ / @ Mirus – All rights reserved

Why iTDD Makes Sense for Harmonic Current Limits

Once the difference between iTDD and iTHD is fully understood, the rational for the use of iTDD becomes quite evident. iTHD provides a relative measure of the harmonic current content at the measured load level. This certainly provides valuable information but can be a bit misleading with respect to the severity of the harmonics problem when the measurements are made during light loading.

iTHD will almost certainly be higher at lighter loading than at heavier loading, but the actual harmonic currents measured in amps will be lower. And it is the ampere value of harmonic current that contributes to problems such as overheating of electrical distribution equipment and distortion of the applied voltage due to harmonic voltage drops across the power system impedance.

To understand this better, we can study an example. Table 1 shows harmonic measurements taken on a 350 HP Variable Speed Drive (VSD) with and without a passive harmonic filter. When operating at full load without a filter, the 5th harmonic current was 110 A and iTHD was 36%. At 25% load, 5th harmonic current dropped to 55 A but iTHD increased to 77%. So, although iTHD more than doubled, the actual amount of 5th harmonic current circulating through the power system dropped by half. This would result in less harmonic losses and their subsequent heating and 50% less voltage distortion on the electrical bus.

The same relationship occurred when the filter was added but now iTHD increased from 4.2% to 8.7% while the 5th harmonic current dropped from 5 A to 2.4 A. Both are significant improvements from the non-filtered case.

This demonstrates how iTHD can be a misleading measurement under lightly loaded conditions. A high iTHD value might seem to require treatment measures when, in fact, the low level of harmonic current in amperes would not introduce any problems. This is the justification for introducing iTDD. It would be a mistake to use iTHD at any load level as the determining factor for whether harmonic mitigation is required or not.

© STULZ / @ Mirus – All rights reserved

TABLE 3

HARMONIC MEASUREMENTS ON A 350 HP VSD WITH AND WITHOUT PASSIVE HARMONIC FILTER

	Current Harmonics (Amps)																	
	RMS		5th		7th		11th		13th		Ithd		Itdd		K-factor		PF	
Load	w/o	With	w/o	With	w/o	With	w/o	With	w/o	With	w/o	With	w/o	With	w/o	With	w/o	With
Full	369	352	110	5.0	37	4.9	19	9.5	25	6.1	36%	4.2%	36%	4.2%	8.9	1.5	0.94	0.98
75%	275	257	83	4.8	35	6.6	16	8.1	17	3.9	37%	5.2%	28%	3.9%	9.3	1.7	0.94	1.00
50%	188	171	67	3.5	27	5.7	5.6	5.6	14	3.9	44%	6.1%	22%	3.0%	10	2.2	0.92	1.00
30%	123	108	48	2.8	27	5.9	4.1	3.3	9.2	1.8	55%	7.8%	16%	2.4%	17	2.4	0.88	0.96
25%	109	92	55	2.4	34	5.8	5.3	2.7	7.3	1.8	77%	8.7%	19%	2.2%	17	2.6	0.79	0.93

How Can iTDD be Calculated?

In IEEE Std 519, iTDD takes the iTHD value and references it to peak demand current. In the definitions provided previously, this is calculated by a root sum squared method with IL as the referenced peak demand fundamental current. This can also be represented as follows, where I(meas) is the actual measured load current and IL is as defined in the standard.

$$iTDD = iTHD \times \frac{I_{(meas)}}{I_L}$$

This would be quite easy to calculate if it wasn't for the standard's impractical definition for peak demand current. So a better means of determining peak demand current is necessary and will be addressed later.

How Can IEEE Std 519 be Best Applied?

IEEE Std 519 was intended to be used as a system standard. The voltage and current harmonic limits presented in the standard were designed to be applied while taking the entire system into consideration, including all linear and non-linear loading. But this has proven to be quite difficult to implement in many applications because:

© STULZ / @ Mirus – All rights reserved

1. It requires an extensive computer simulation which few design engineers, equipment suppliers or contractors are capable of performing, especially when 1-Lines are complex or when other equipment is unknown.

2. For an accurate analysis, a detailed 1-Line is required including load types, cable sizes and cable run lengths.

3. A PCC location must be agreed upon between the utility, design engineer and end user.

4. Load profiles and worse case operating conditions need to be determined.

5. Peak demand load, IL, by definition, is impossible to determine without operating for, at least, 1 year. This is required to calculate SCR in order to determine the applicable harmonic current limits and iTDD in order to determine if these limits are being met.

As a result, many consulting and facility engineers have found it difficult to apply IEEE Std 519 as a system standard because detailed information on the system and its loading is often not available at the design stage. And even when the information is available, the resources required to do a proper power system analysis does not always exist. Further complicating matters is that the standard applies to the peak demand current which, again, is impossible to determine at the design stage.

Another less obvious problem is that harmonic voltage distortion is always higher near the loads, where the harmonic currents are generated, than it is at the service entrance where the PCC is usually defined. Therefore, even if the harmonic limits are met at the PCC, they can still be at problem levels downstream near any sensitive loads.

So, when engineers do try to apply IEEE Std 519 as a system standard, they will normally transfer the responsibility of determining compliance to the contractor or equipment supplier. But all of the difficulties remain so this usually leads to extreme frustration for all parties, wasted time and associated costs, and unsatisfactory results.

Many engineers therefore, have determined that the simplest way of ensuring that harmonic distortion levels are effectively controlled, is to apply the standard's limits on an individual equipment basis. By insisting that the current harmonic limits be applied at the terminals of the non-linear equipment, compliance on a system basis can be assured. This approach can be very effective, but if not applied in a practical manner, can also lead to costly and possibly unreliable harmonic mitigation equipment being used which many manufacturers are reluctant to integrate into their product offerings.

© STULZ / @ Mirus – All rights reserved

When properly defined however, this method is often the best compromise for ensuring IEEE Std 519 compliance to the benefit of all stakeholders – the End User, Contractor, Utility, Equipment Manufacturer and Design Engineer. So how can that be achieved?

Applying IEEE Std 519 at the Equipment Terminals

The most common mistake made in applying harmonic limits at the equipment terminals is the use of iTHD instead of iTDD. As mentioned earlier, iTHD levels can be quite high at lightly loaded conditions when the current harmonic in amps is quite low and therefore, unproblematic. IEEE Std 519 recognizes this and therefore, defines the limits with respect to iTDD so it is extremely important that this approach be adopted. Using iTHD will almost certainly force the manufacturer to attempt the use of mitigation equipment that is overdesigned. This can lead to power system issues, especially when supplied by a 'weak' generator source, or equipment operating issues associated with unacceptable voltage drops at higher loading levels or the introduction of higher order harmonics when active harmonic mitigation solutions are used.

Also, in order to overcome the challenges of determining peak demand current at the design stage, it can be beneficial to accept the premise that maximum load current should be defined as the maximum operating current of the non-linear load at design conditions. Often this is full load or rated current but may also be calculated independent of component or motor rating. In this way, SCR can be more easily calculated and the applicable current limits can then be taken from Table 2 of the standard.

Using maximum operating current as peak demand current also allows current total demand distortion, iTDD, to be determined by running simulations at maximum operating load. When iTHD measurements are taken, iTDD can be easily calculated by multiplying these values by the ratio of measured current to maximum operating current. For example, if iTHD is measured as 44% at 50% loading, then iTDD at that load would be half of that value or 22% (see Table 3).

To simplify things further, many engineers will select a value of iTDD that they determine to best protect their client's interests. In mission critical applications, they will often choose the most stringent current limit in the standard which is < 5% regardless of what the SCR level dictates. This will ensure that harmonics are effectively controlled but, it should be noted, it may lead to unnecessarily higher equipment costs. If this limit is selected, it is important to repeat that iTDD should be used rather than iTHD. Or if iTHD is used, it should only be applied at the maximum operating load current. If it is applied across the entire load operating range, it will almost certainly lead to over compensation, much higher costs and a possible negative effect on equipment reliability.

© STULZ / @ Mirus – All rights reserved

What Equipment can be Used to Meet Harmonic Compliance in Adjustable Speed Drive Applications?

Of course, there are many options for harmonic mitigation to meet IEEE Std 519 compliance but one of the most effective passive harmonic solutions for 3-phase rectifiers is the Lineator AUHF wide spectrum harmonic filter (WSHF). This approach is series connected and incorporates a combination of a blocking element and a tuned filtering element as shown in Fig. 1.

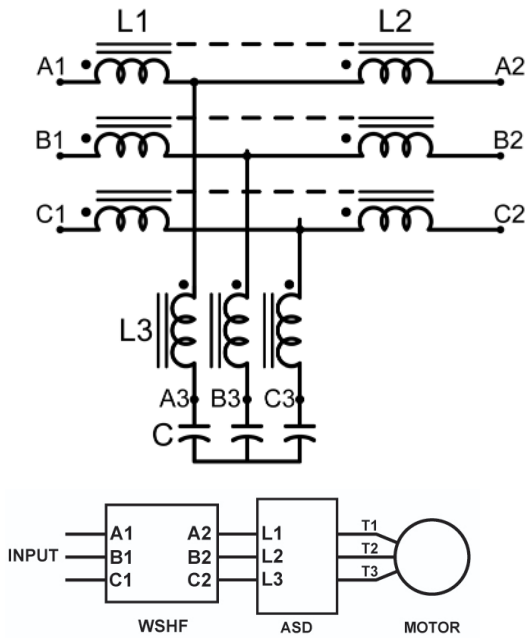

Fig. 1: Lineator AUHF schematic and connection diagram

Important in the design of an effective filter is the prevention of harmonic importation from the line side of the filter. Without this ability, a filter could easily be overloaded when installed on a power system where other harmonic generating, non-linear loads exist on the same bus. The Lineator AUHF achieves this by tuning the filter, as seen from the input terminals, to near the 4th harmonic, comfortably below the predominant harmonics of 3-phase rectifiers.

When applied to a conventional Adjustable Speed Drive (ASD), the ASD's relatively high level of DC bus capacitance allows for stable operation and very effective harmonic mitigation. Standard designs will reduce current distortion at full load to < 8% and premium models can reach levels of < 5%.

Another important design criteria for these filters is the level of capacitive reactance that the filter capacitors will introduce under light loading. A design that limits capacitive reactance at < 15% of the rated kW of the filter, will ensure stable and effective

© STULZ / @ Mirus – All rights reserved

operation on either a high impedance generator supply or low impedance large utility transformer source.

Recommended Specification

Each Adjustable Speed Drive of 30 HP and larger shall be supplied with a passive harmonic filter to meet all requirements outlined in IEEE Std 519 (both 1992 and 2014 editions) for individual and total harmonic voltage and current distortion. The Point of Common Coupling (PCC) for all voltage and current harmonic calculations and measurements shall be the input terminals to the harmonic mitigation equipment.

- Harmonic mitigation shall be by passive inductor/capacitor network. To prevent possibility of switching frequency resonance, active electronic components shall not be used.
- Performance Guarantee: iTDD must be <8% with background voltage distortion up to 5% and voltage imbalance up to 3%. [Or for more critical applications, iTDD must be <5% with background voltage distortion up to 2% and voltage imbalance up to 2%]. The filter must be capable of operating in voltage distortion environments up to 8% without derating.
- Power factor shall be > 0.95 in operating range from 25% to full load.
- To ensure compatibility with engine generators, the harmonic mitigation equipment must never introduce a capacitive reactive power (kVAR) which is greater than 15% of its kW rating for sizes ≥ 100HP and 20% for sizes ≤ 75HP. If the filter does not meet this requirement, it must integrate a capacitor switching contactor.
- Factory Performance Testing: Manufacturer must be capable of factory testing for harmonic mitigating performance and energy efficiency under actual adjustable speed drive loads.

Summary and Conclusion

IEEE Std 519 has become the accepted standard for Power System Harmonic Limits in N. America and many other areas around the world. Applying this as a power system standard however, has proven to be difficult for many reasons. The most challenging of which are (i) determining the peak demand current at the design stage since the standard's definition for this requires load measurements for at least 1 year, (ii) accumulating the distribution and load information required to do a proper computer simulation and (iii) having a computer simulation program with accurate models of loads and distribution equipment, especially when complex 1-Lines are involved.

To address this, many engineers have adopted the approach of applying the standard's harmonic limits at the non-linear equipment terminals. When this is combined with an understanding that a load's maximum operating current can be a good measure of the peak demand load and targeted limits are based on iTDD rather than iTHD, this

© STULZ / @ Mirus – All rights reserved

approach can assure that the interests of all parties has been suitably addressed.

The use of wide spectrum passive harmonic filters can be a very effective way of meeting the harmonic limits of IEEE Std 519 when Adjustable Speed Drives are used. iTDD levels of < 8% and < 5% can be easily and reliably met using these devices.

For a sample analysis of how this approach can be used to ensure harmonic compliance, refer to 'Analysis for IEEE Std 519 Compliance of a Hospital HVAC System'. This analysis uses Mirus' SOLV Computer Simulation software to demonstrate how specifying an iTDD value of < 8% at the input terminals of all ASD's 30 HP or larger, met the requirements of IEEE Std 519 under both Utility and Generator supply.

Author:

Anthony (Tony) Hoevenaars (BESc'79) is President and CEO of Mirus International, Brampton, ON, Canada.

© STULZ / @ Mirus – All rights reserved

Appendix: Analysis for IEEE Std 519 Compliance of a Hospital HVAC System

To demonstrate compliance with the harmonic requirements of IEEE Std 519, a computer simulation can be performed. Mirus' free SOLV Computer Simulation software is well suited for this task and is used here to analyze the HVAC system in a modern Boston area hospital. The hospital is equipped with full generator backup so the analysis is done under both normal Utility operation and in emergency mode when supplied by the generators.

The analysis is done to demonstrate that compliance with the standard can be met by specifying a minimum requirement for harmonic performance at the input terminals of the adjustable speed drive (ASD) loads. In the simulations with harmonic mitigation, Lineator AUHF passive wide spectrum harmonic filters were used on all ASDs of 30 HP and larger.

The electrical distribution equipment and HVAC load data is as follows.

Utility Supply:

- 2 x 2500 kVA, 13.8kV to 480V, Z = 5.75% transformers sharing load on 2 buses
- Utility Fault Level – 13.1kA @ 13.8kV

Generator Supply:

- 2 x 2000 kW, 480V, Xd" = 13%, PF = 0.8 generators sharing load on 2 buses

Non-linear load HVAC equipment:

- 4 x 400 HP Chillers with maximum operating load of 75% when redundancy is taken into consideration
- 700 HP total AHU load with EC fans
- 4 x 15 HP Cooling Tower fans
- Chilled water and other pumps
  - Total of 250 HP in sizes 30HP and larger
  - Total of 150 HP in sizes 25 HP and smaller
- Total of 150 HP of miscellaneous fans 20 HP and smaller.
  75% operating diversity assumed.

Linear load:

- Multiple fixed speed motors totaling 146 HP (109 kW) with 0.9 PF assumed.

After entering this data into the SOLV software, analysis is first performed with only AC line reactors or DC chokes supplied with the ASDs. Figures 1 through 4 show computer simulation results for both the Utility Source and Generator Source configurations.

© STULZ / @ Mirus – All rights reserved

When supplied by the Utility Source, the computer simulation shows that the system exceeds IEEE Std 519 current distortion limits at both the Utility Supply (PCC 2) and the User Transformer (PCC 1) when only reactors are supplied with the HVAC system ASDs. Voltage distortion limits are met at PCC 2 and exceed the limits of the 1992 version (ie. < 5%) at PCC 1 but not the 2014 version (ie. < 8%).

But when supplied by the higher impedance or 'weaker' Generator Source, harmonic voltage distortion levels are much higher and both the current distortion limits and voltage distortion limits are exceeded at the Generator terminals (shown as PCC 1 and PCC 2).

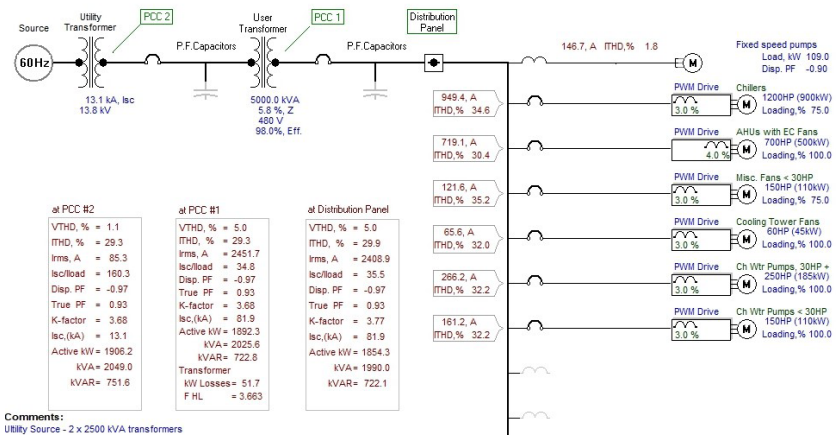

Fig. 1: SOLV Computer Simulation 1-Line – Utility Supply (Reactors Only)

Project Name: Boston Area Hospital
Point of Coupling: PCC #2
Bus voltage at PCC: 13 kV
Short-circuit ratio: 160.3

Summary of Compliance with IEEE Std 519:1992 and IEEE Std 519:2014 Harmonic Limits:

		Calculated Value, [%]	IEEE-519:1992 Limit, [%]		IEEE-519:2014 Limit, [%]	
Voltage Total Harmonic Distortion	(VTHD)	1.1	5.0	PASS	5.0	PASS
Max.Individual Voltage Harmonic		0.9 { 5}	3.0	PASS	3.0	PASS
Current Total Demand Distortion	(iTDD)	29.3	15.0	FAIL	15.0	FAIL
Max.Individual current harmonic	<11	27.2 { 5}	12.0	FAIL	12.0	FAIL
	11 to 16	5.5 {11}	5.5	FAIL	5.5	FAIL
	17 to 22	1.9 {17}	5.0	PASS	5.0	PASS
	23 to 34	0.7 {25}	2.0	PASS	2.0	PASS
	>35	0.1 {47}	1.0	PASS	1.0	PASS

Point of Coupling: PCC #1
Bus voltage at PCC: 480 V
Short-circuit ratio: 34.8

Summary of Compliance with IEEE Std 519:1992 and IEEE Std 519:2014 Harmonic Limits:

		Calculated Value, [%]	IEEE-519:1992 Limit, [%]		IEEE-519:2014 Limit, [%]	
Voltage Total Harmonic Distortion	(VTHD)	5.0	5.0	FAIL	8.0	PASS
Max.Individual Voltage Harmonic		4.0 { 5}	3.0	FAIL	5.0	PASS
Current Total Demand Distortion	(iTDD)	29.3	8.0	FAIL	8.0	FAIL
Max.Individual current harmonic	<11	27.2 { 5}	7.0	FAIL	7.0	FAIL
	11 to 16	5.5 {11}	3.5	FAIL	3.5	FAIL
	17 to 22	1.9 {17}	2.5	PASS	2.5	PASS
	23 to 34	0.7 {25}	1.0	PASS	1.0	PASS
	>35	0.1 {47}	0.5	PASS	0.5	PASS

Notes: Based on the information provided, this application will NOT meet IEEE Std 519 harmonic limits

Fig. 2: SOLV Computer Simulation IEEE Std 519 C ompliance Report – Utility Supply (Reactors Only)

© STULZ / @ Mirus – All rights reserved

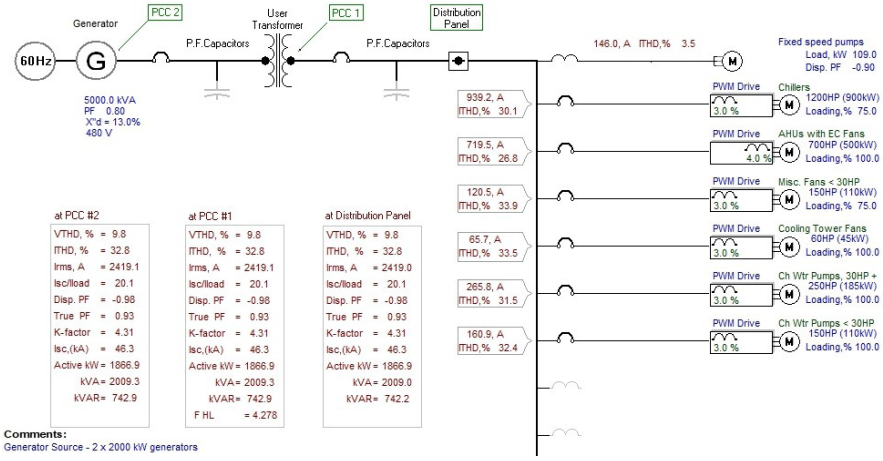

Fig. 3: SOLV Computer Simulation 1-Line – Generator Supply (Reactors Only)

Project Name: Boston Area Hospital
Point of Coupling: PCC #2
Bus voltage at PCC: 480 V
Short-circuit ratio: 20.1
Summary of Compliance with IEEE Std 519:1992 and IEEE Std 519:2014 Harmonic Limits:

		Calculated Value, [%]	IEEE-519:1992 Limit, [%]		IEEE-519:2014 Limit, [%]	
Voltage Total Harmonic Distortion	(VTHD)	9.8	5.0	FAIL	8.0	FAIL
Max.Individual Voltage Harmonic		7.6 {5}	3.0	FAIL	5.0	FAIL
Current Total Demand Distortion	(iTDD)	32.8	8.0	FAIL	8.0	FAIL
Max.Individual current harmonic	<11	30.2 { 5}	7.0	FAIL	7.0	FAIL
	11 to 16	6.0 {11}	3.5	FAIL	3.5	FAIL
	17 to 22	2.1 {17}	2.5	PASS	2.5	PASS
	23 to 34	0.8 {25}	1.0	PASS	1.0	PASS
	>35	0.2 {41}	0.5	PASS	0.5	PASS

Point of Coupling: PCC #1
Bus voltage at PCC: 480 V
Short-circuit ratio: 20.1
Summary of Compliance with IEEE Std 519:1992 and IEEE Std 519:2014 Harmonic Limits:

		Calculated Value, [%]	IEEE-519:1992 Limit, [%]		IEEE-519:2014 Limit, [%]	
Voltage Total Harmonic Distortion	(VTHD)	9.8	5.0	FAIL	8.0	FAIL
Max.Individual Voltage Harmonic		7.6 { 5}	3.0	FAIL	5.0	FAIL
Current Total Demand Distortion	(iTDD)	32.8	8.0	FAIL	8.0	FAIL
Max.Individual current harmonic	<11	30.2 { 5}	7.0	FAIL	7.0	FAIL
	11 to 16	6.0 {11}	3.5	FAIL	3.5	FAIL
	17 to 22	2.1 {17}	2.5	PASS	2.5	PASS
	23 to 34	0.8 {25}	1.0	PASS	1.0	PASS
	>35	0.2 {41}	0.5	PASS	0.5	PASS

Notes: Based on the information provided, this application will NOT meet IEEE Std 519 harmonic limits

Fig. 4: SOLV Computer Simulation IEEE Std 519 Compliance Report – Generator Supply (Reactors Only)

So in order to comply with IEEE Std 519 in both operating scenarios, additional harmonic mitigation equipment is required. One option is to apply Lineator AUHF filters to the larger of the non-linear loads. The standard Lineator AUHF guarantees < 8% iTDD at the terminals of the filter even with background voltage distortion as high as 5% and with voltage imbalance up to 3%. Therefore, specifying a performance level with these parameters at the input of the HVAC equipment would ensure that harmonic mitigation equipment with that level of performance would be provided with the equipment. A review of the non-linear loads shows harmonic mitigation should be considered for the chillers, air handlers and chilled water pumps that are 30 HP and larger.

© STULZ / @ Mirus – All rights reserved

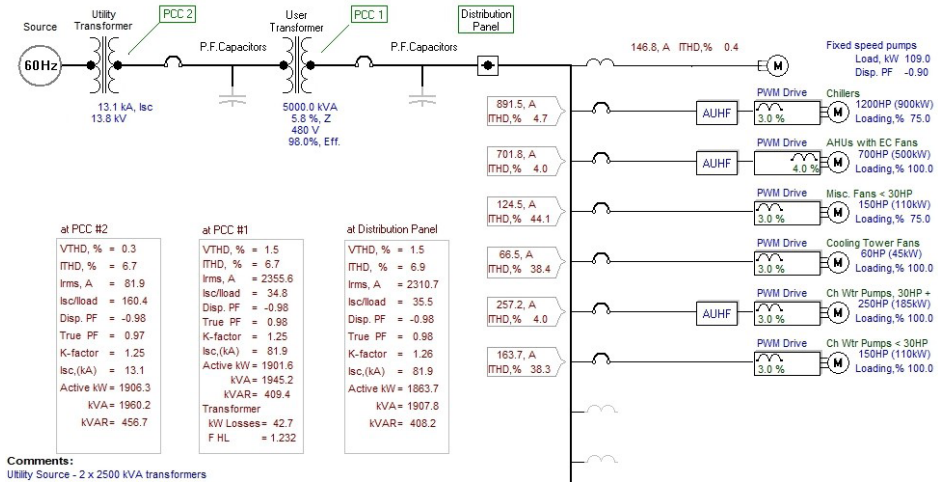

Fig. 5: SOLV Computer Simulation 1-Line – Utility Supply (with Harmonic Mitigation)

Project Name: **Boston Area Hospital**
Point of Coupling: **PCC #2**
Bus voltage at PCC: 13 kV
Short-circuit ratio: 160.4
Summary of Compliance with IEEE Std 519:1992 and IEEE Std 519:2014 Harmonic Limits:

		Calculated Value, [%]	IEEE-519:1992 Limit, [%]		IEEE-519:2014 Limit, [%]	
Voltage Total Harmonic Distortion	(VTHD)	0.3	5.0	PASS	5.0	PASS
Max.Individual Voltage Harmonic		0.2 {11}	3.0	PASS	3.0	PASS
Current Total Demand Distortion	(ITDD)	6.7	15.0	PASS	15.0	PASS
Max.Individual current harmonic	<11	4.8 { 5}	12.0	PASS	12.0	PASS
	11 to 16	2.5 {11}	5.5	PASS	5.5	PASS
	17 to 22	0.6 {17}	5.0	PASS	5.0	PASS
	23 to 34	0.1 {29}	2.0	PASS	2.0	PASS
	>35	0.1 {37}	1.0	PASS	1.0	PASS

Point of Coupling: **PCC #1**
Bus voltage at PCC: 480 V
Short-circuit ratio: 34.8
Summary of Compliance with IEEE Std 519:1992 and IEEE Std 519:2014 Harmonic Limits:

		Calculated Value, [%]	IEEE-519:1992 Limit, [%]		IEEE-519:2014 Limit, [%]	
Voltage Total Harmonic Distortion	(VTHD)	1.5	5.0	PASS	8.0	PASS
Max.Individual Voltage Harmonic		0.8 {11}	3.0	PASS	5.0	PASS
Current Total Demand Distortion	(ITDD)	6.7	8.0	PASS	8.0	PASS
Max.Individual current harmonic	<11	4.8 { 5}	7.0	PASS	7.0	PASS
	11 to 16	2.5 {11}	3.5	PASS	3.5	PASS
	17 to 22	0.6 {17}	2.5	PASS	2.5	PASS
	23 to 34	0.1 {29}	1.0	PASS	1.0	PASS
	>35	0.1 {37}	0.5	PASS	0.5	PASS

Notes: Based on the information provided, this application will meet IEEE Std 519 harmonic limits

Fig. 6: SOLV Computer Simulation IEEE Std 519 Compliance Report – Utility Supply (With Harmonic Mitigation)

© STULZ / @ Mirus – All rights reserved

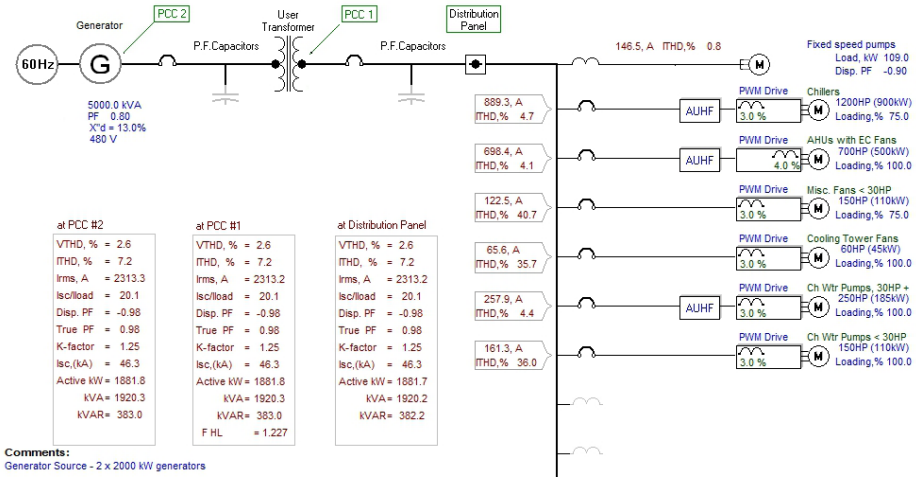

Fig. 7: SOLV Computer Simulation 1-Line – Generator Supply (with Harmonic Mitigation)

Project Name: Boston Area Hospital
Point of Coupling: PCC #2
Bus voltage at PCC: 480 V
Short-circuit ratio: 20.1

Summary of Compliance with IEEE Std 519:1992 and IEEE Std 519:2014 Harmonic Limits:

		Calculated Value, [%]	IEEE-519:1992 Limit, [%]		IEEE-519:2014 Limit, [%]	
Voltage Total Harmonic Distortion	(VTHD)	2.6	5.0	PASS	8.0	PASS
Max.Individual Voltage Harmonic		1.4 {7}	3.0	PASS	5.0	PASS
Current Total Demand Distortion	(ITDD)	7.2	8.0	PASS	8.0	PASS
Max.Individual current harmonic	<11	5.5 {5}	7.0	PASS	7.0	PASS
	11 to 16	2.2 {11}	3.5	PASS	3.5	PASS
	17 to 22	0.3 {19}	2.5	PASS	2.5	PASS
	23 to 34	0.3 {29}	1.0	PASS	1.0	PASS
	>35	0.2 {35}	0.5	PASS	0.5	PASS

Point of Coupling: PCC #1
Bus voltage at PCC: 480 V
Short-circuit ratio: 20.1

Summary of Compliance with IEEE Std 519:1992 and IEEE Std 519:2014 Harmonic Limits:

		Calculated Value, [%]	IEEE-519:1992 Limit, [%]		IEEE-519:2014 Limit, [%]	
Voltage Total Harmonic Distortion	(VTHD)	2.6	5.0	PASS	8.0	PASS
Max.Individual Voltage Harmonic		1.4 {7}	3.0	PASS	5.0	PASS
Current Total Demand Distortion	(ITDD)	7.2	8.0	PASS	8.0	PASS
Max.Individual current harmonic	<11	5.5 {5}	7.0	PASS	7.0	PASS
	11 to 16	2.2 {11}	3.5	PASS	3.5	PASS
	17 to 22	0.3 {19}	2.5	PASS	2.5	PASS
	23 to 34	0.3 {29}	1.0	PASS	1.0	PASS
	>35	0.2 {35}	0.5	PASS	0.5	PASS

Notes: Based on the information provided, this application will meet IEEE Std 519 harmonic limits

Fig. 8: SOLV Computer Simulation IEEE Std 519 Compliance Report – Generator Supply (With Harmonic Mitigation)

© STULZ / @ Mirus – All rights reserved

The simulations in Fig 5 through 8 show that all requirements of IEEE Std 519 can be met without the need of additional harmonic mitigation for the other ASDs, which are all 25 HP or smaller.

Summary and Conclusion

The HVAC system of a modern hospital was analyzed using Mirus' SOLV Computer Simulation software. By applying passive harmonic filters at the input of all adjustable speed drives of 30 HP and larger, IEEE Std 519 requirements were met under both Utility and Generator supply. This demonstrates that by specifying a minimum harmonic performance at the input of the larger ASD loads, the challenge of meeting IEEE Std 519 harmonic requirements can be simplified for even the most complex of power distribution systems and load profiles.

© STULZ / @ Mirus – All rights reserved

ABOUT MIRUS INTERNATIONAL INC.

Since 1991, Mirus International has been a supplier of specialized power quality products to reduce or eliminate harmonic problems and save energy in electrical power distribution systems worldwide. As true innovators, our unique approach to harmonic mitigation has produced many patented designs useful in addressing the problems associated with harmonic generating non-linear loads such as Adjustable Speed Drives (ASDs), both AC and DC, personal computers and other power electronic devices. Markets include Oil & Gas (drilling and pumping applications), Water/Waste Water, Chillers and other HVAC equipment, Marine vessels, Data Centers (servers and cooling equipment), Telecommunications and Broadcasting facilities.

ABOUT STULZ USA

STULZ Air Technology Systems, Inc. (STULZ USA) is an ISO 9001 registered manufacturer of environmental control equipment and is responsible for product development, manufacturing, and distribution for the North American arm of the international STULZ Group. STULZ provides user driven, custom designed and purpose built precision cooling, ultrasonic humidification and desiccant dehumidification solutions for mission critical applications. We go above and beyond to provide our customers with the ideal solution for their application, often designed and manufacturing a fully custom cooling solution, designed by our team of engineers located at our manufacturing facility and US headquarters in Frederick, Maryland.

© STULZ / @ Mirus – All rights reserved

MIRUS INTERNATIONAL

31 Sun Pac Blvd. | Brampton, Ontario L6S 5P6
Tel. 905.494.1120 | Fax 905.494.1140
mirus@mirusinternational.com

STULZ AIR TECHNOLOGY SYSTEMS, INC.

1572 Tilco Drive | Frederick, MD 21704
Tel. 301.620.2033 | Fax 301.662.5487
info@stulz-ats.com